E-T-A®
ENGINEERING TECHNOLOGY

Instruction manual

ControlPlex® CPC10

Contents

1 Contents 2
2 General information 4
2.1 Safety instructions 4
2.2 Qualified personnel 4
2.3 Use 4
2.4 Delivery state 4
3 General description 5
3.1 Design of the entire system 6
3.2 Dimensions of version CPC10IO-S1 7
3.3 Status indication and terminals 7
3.3.1 Terminals (1) (11) for the voltage supply and the **ELBus®** (3) 7
3.3.2 Connector socket for the **IO link Master®**, connector socket X81 8
3.3.3 LED PWR 8
3.3.4 LED “CE/CM” 8
4 Mounting and installation 9
4.1 Mounting of the system 9
4.2 Wiring and terminals of the IO link controller 9
4.2.1 Supply (1/11/3) by means ofs **ELBus®** via SVS201-PWR-xx Board 10
4.2.2 Connection to the IO link device CPC10IO-S1 (-X81) 10
5 Operating modes of the device CPC10IO-S1 11
5.1 Operating mode: SVS_SYSTEMINIT (system start) 11
5.2 Operating mode: SVS_ERROR_CRITICAL (critical failure) 11
5.3 Operating mode: SVS_ERROR_UNCRITICAL (uncritical failure) 11
5.4 Operating mode: SVS_PARAMETERIZATION (parameterisation of the SVS200-COM) 11
5.5 Operating mode: SVS_STANDALONE (independent operation) 11
5.6 Operating mode: SVS_NORMAL_MODE (faultless operation) 12
5.7 Signalling of the various operating modes 12
6 Basic functions of the entire system 12
6.1 Internal cycle times 12
6.2 Hot swap of circuit protectors 13
6.3 Communication via master-specific tools 13
7 Communication via IO link 13
7.1 ControlPlex® controller model 13
7.2 IODD file 13
8 Cyclical I/O data 14
8.1 Data from IO link master to device 14
8.2 Data from IO link device CPC10IO-S1 to IO link master 18
8.2.1 Status circuit protector 19
8.2.2 Load current circuit protector 19

9 Non-cyclical I/O data 20
9.1 System commands 21
9.2 Device 22
9.2.1 Diagnosis information IO link device CPC10IO-S1 22
9.2.2.1 Extended configuration data IO link device CPC10IO-S1 23
9.2.2 Configuration data IO link device CPC10IO-S1 23
9.2.3 Device information IO link CPC10IO-S1 25
9.3 Circuit protector 25
9.3.1 Device parameters of circuit protector 25
9.3.2 Configuration data slot for circuit protector 27
9.3.3 Internal communication messages 27
9.3.4 Action commands circuit protector 28
9.3.5 Load voltage circuit protector 28
9.3.6 Diagnostic messages circuit protector 29
9.4 Device information circuit protector 31
9.4.1 Circuit protector type 31
9.4.2 Hardware version 32
9.4.3 Software version 32
9.4.4 Serial number 33
10 Appendix 34
10.1 List of pictures 34
10.2 Technical data 34
10.3 Subject index 34

2 General information

2.1 Safety instructions

This manual points out possible danger for your personal safety and gives instruction how to avoid property damage. The following safety symbols are used to draw the reader's attention to the safety instructions included in this manual.

Danger!
Danger to life and limb unless the following safety precautions are taken.

Warning
Danger to machinery, materials or the environment unless the following safety precautions are taken.

Note
Information is provided to allow a better understanding.

2.2 Qualified personnel

This user manual must exclusively be used by qualified personnel, who are able - based on their training and experience - to realise arising problems when handling the product and to avoid related hazards. These persons have to ensure that the use of the product described here meets the safety requirements as well as the requirements of the presently valid directives, standards and laws.

2.3 Use

The product is part of a continuous enhancement process. Therefore there might be deviations between the product in hand and this documentation. These deviations will be remedied by a regular review and resulting corrections in future editions. The right to make changes without notice is reserved. Error and omissions excepted.

2.4 Delivery state

The product is supplied with a defined hardware and software configuration. Any changes in excess of the documented options are not permitted and lead to liability exclusion.

3 General description

Modern factory automation and process control has ever more complex and sophisticated requirements. Control is no longer the sole focus, but monitoring of components and processes becomes more and more important. This is exactly the target application area of the intelligent and bus-capable power distribution system ***ControlPlex®***. It serves for the protection of industrial applications as well for monitoring and control. The communication unit CPC10IO is, as an IO link device, the core of the system and serves for the data exchange to the superordinate IO link system and to the subordinate components. These are the IO link master on the one hand and the power distribution system SVS201-PWR on the other, fitted with the electronic circuit protectors ESX50D. The CPC10IO controller can be plugged onto a power board SVS201-PWR and offers the possibility of communication with up to sixteen electronic circuit protectors. Communication options comprise transmission of the operating condition, of measuring values and device information of the connected components, but also changes of the product-specific parameters such as current ratings and execution of actions, e.g. ON and OFF operation.

The information can be transmitted to the superordinate control system cyclically or non-cyclically. If no connection is available to a superordinate control unit, this will have no negative effect on the behaviour of the connected circuit protectors. Even without a connection to a superordinate control unit, the communication unit is able to ensure the functionality. The saved parameters will be used for this purpose.

The bus-capable power distribution system ***ControlPlex®*** offers the well-known E-T-A quality and reliability with regard to overcurrent protection in combination with the innovative functions on the score of automation technology.

3.1 Design of the entire system

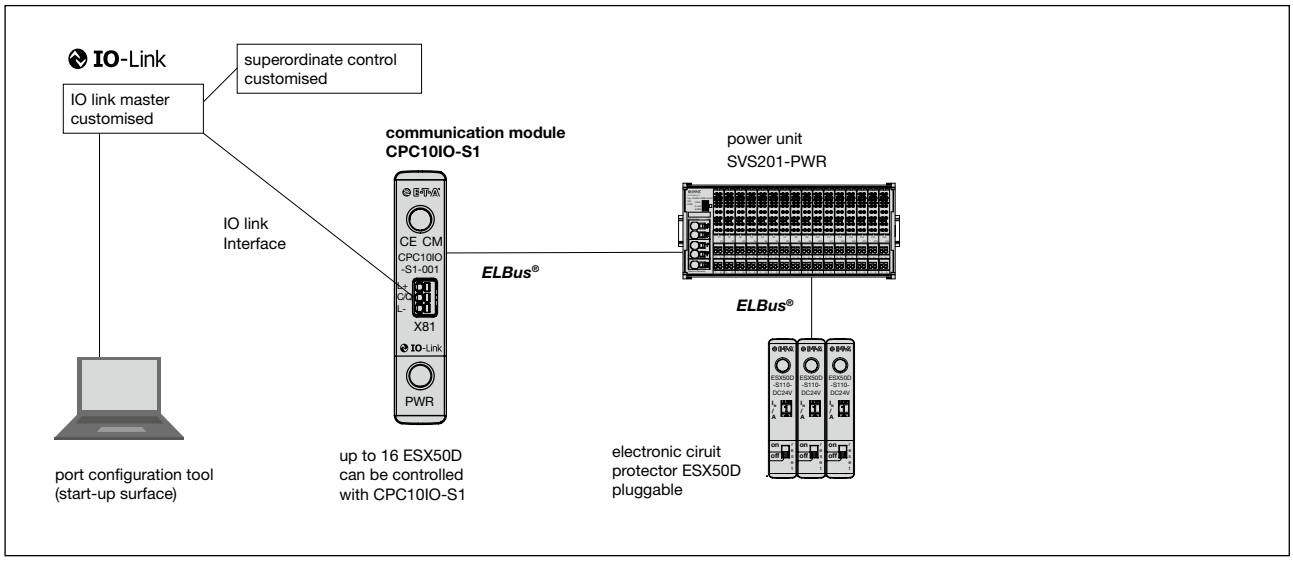

fig. 1: System overview

The IO link controller CPC10IO-S1 is the centre of the ***ControlPlex®*** system. Thanks to its interfaces, it allows a consistent communication between the power distribution systems SVS201-PWR with the plugged-in electronic circuit protectors ESX50D and the superordinate IO link master and/or the superordinate control unit.

The IO link interface to the superimposed IO link master is realised with a 3-wire cable. It allows connection of the required IO link master to the ***ControlPlex®*** system, thus enabling display and analysis of the individual measuring values as well as diagnosis and control of the individual electronic circuit protectors. This enables the user to have unrestricted access to the safety-relevant functions even in the event of an interruption. Any occurring failures will be detected quickly and can be remedied without delay. The CPC10IO system effectively reduces system downtimes and significantly increases productivity.

The interface to the power distribution board SVS201-PWR is realised with local bus defined specially in-house at E-T-A called **ELBus®**. It transmits all cyclical and non-cyclical data within a cycle time of 530 ms. The Power Board is available in two design versions for eight or sixteen electronic circuit protectors.

3.2 Dimensions of version CPC10IO-S1

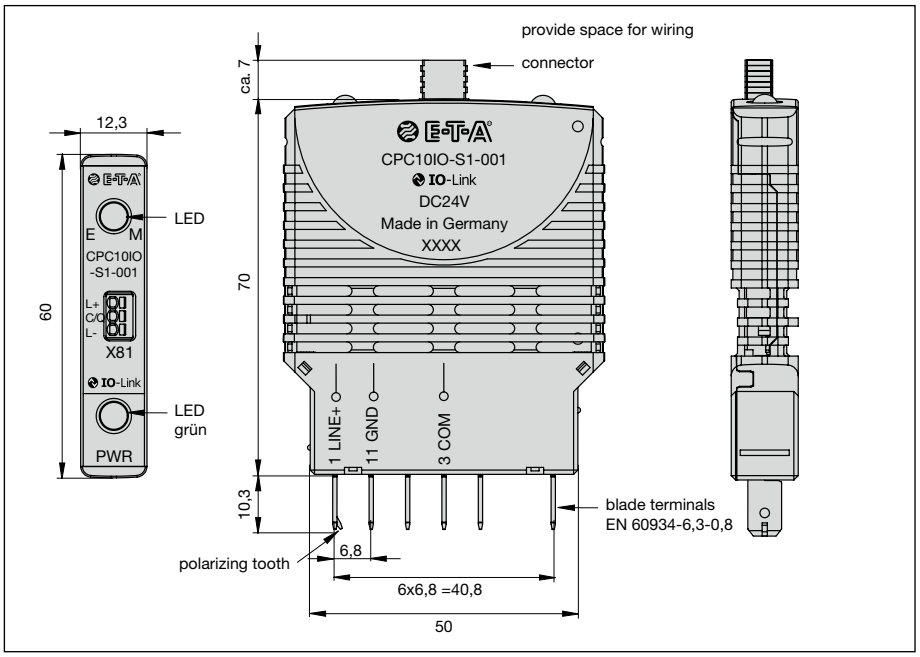

fig. 2: CPC10IO-S1

3.3 Status indication and terminals

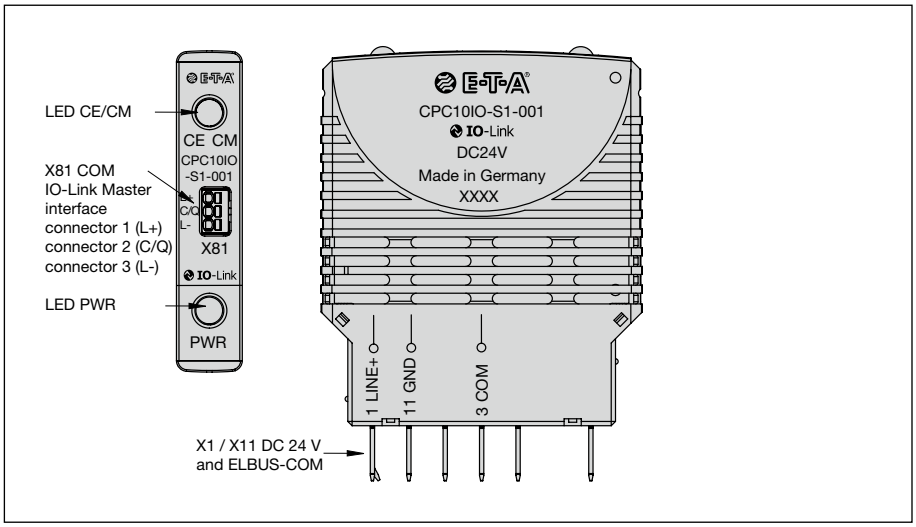

fig. 3: display elements and terminals CPC10IO-S1

3.3.1 Terminals (1) (11) for the voltage supply and the ELBus® (3)

The operating voltage of the device is 24 V DC. Faultless operation of the device is ensured in a voltage range of 18 V to 32 V. Current consumption on duty is typically 15 mA. These terminals are blade terminals 6.3 mm to EN 60934-6,3-0,8. (please also see 3.3 Status indication and terminals)

⚠ Using a supply voltage outside the indicated operating range can cause malfunctions or destruction of the device.

3.3.2 Connector socket for the IO link Master®, connector socket X81

This connector socket serves for connecting the communication unit CPC10IO with the superordinate IO link master. Connection of the device with the master is realised with a one-to-one wiring mode. Preferably, the connection should be a typical sensor cable 3-pole with a max. cross section of 0.5 mm² (e.g. FD Li9Y11Y or LifYY). The cable does not have to be shielded specially. The cable length between the IO link master and the IO link device CPC10IO must not exceed 20 m.

Use of the terminals for applications not provided for in the operation manual or improper connection can lead to malfunction or destruction of the device.

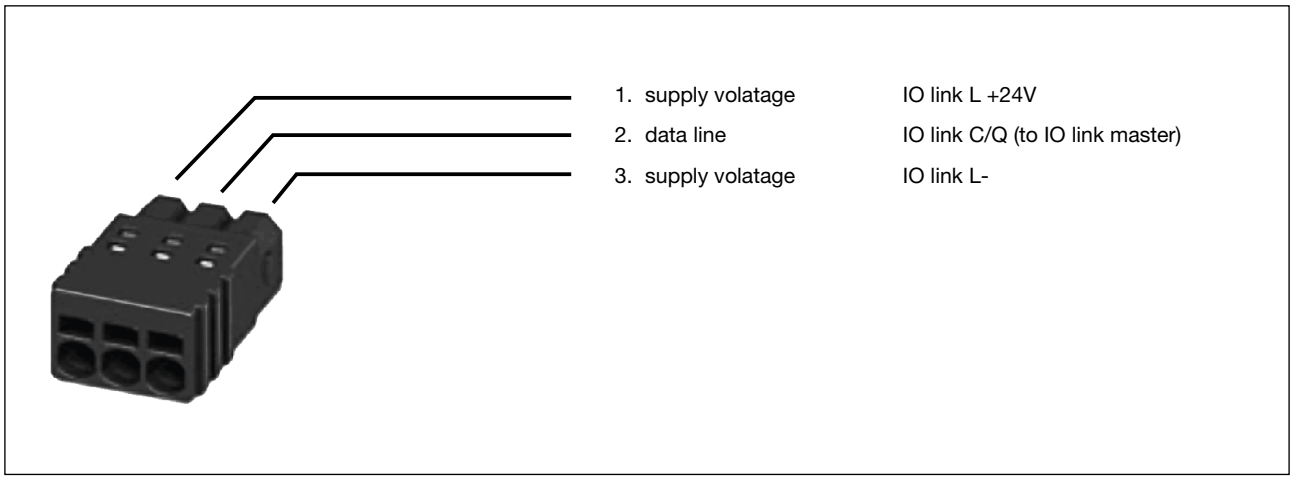

fig. 4: **IO-Link®** connection

The IO link device is supplied with voltage both via the supply terminals X!/X11 and via X81 COM.

3.3.3 LED “PWR”

The PWR diode lights up green if supply voltage is applied.

3.3.4 LED “CE/CM”

The LED CE/CM shows the status of the communication unit. Available LED colours are red, green and yellow/orange. For further details please see fig. 8. Illustration of operating modes.

For the arrangement of the LEDs on the device please see fig. 3: display elements and terminals CPC10IO-S1.

4 Mounting and installation

4.1 Mounting of the system

The preferred mounting position of the CPC10IO-S1 is plugged in horizontally into the power distribution board SVS201-PWR.

fig. 5: Mounting position

4.2 Wiring and terminals of the IO link controller

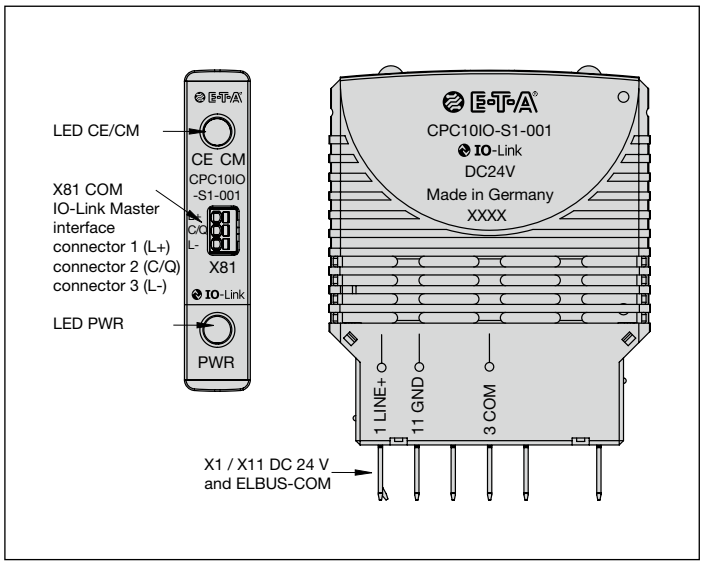

fig. 6: terminals CPC10IO-S1-xxx

4.2.1 Supply (1/11/3) by means of ELBus® via SVS201-PWR-xx Board

Voltage ratings:	DC 24 V (18 ... 33 V)
Current ratings:	typically 15 mA
Terminal design:	blade terminals 6.3mm
	to EN60934-6,3-0,8
terminal 1:	**ELBus® DC +24V (LINE +)**
terminal 11	**ELBus® GND**
terminal 3:	Data line ELBus® ELB (COM)

The symmetrical rail of the power distribution system has to be grounded (PE/FE).

The IO link device CPC10IO-S1 is plugged directly into a free slot of the SVS201-PWR board, the free terminals serve for fixing the controller mechanically.

⚠ Use of the terminals for applications not provided for in the operation manual or improper connection can lead to malfunction or destruction of the device.

4.2.2 Connection to the IO link device CPC10IO-S1 (-X81)

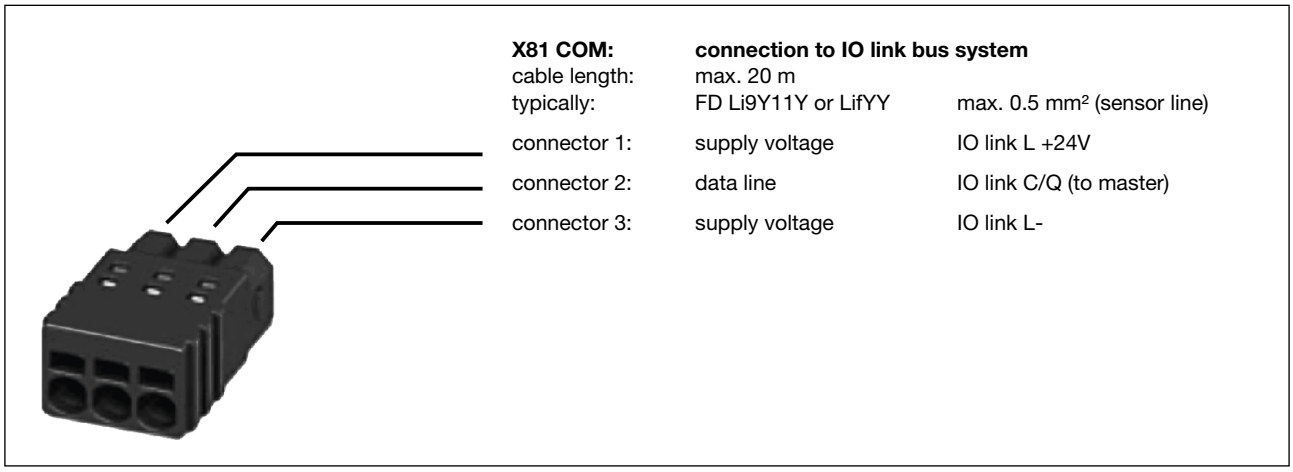

fig. 7: IO link connector

When wiring and connecting to the bus system IO link, the installation and wiring regulations of the PROFIBUS User Organisation (PNO) have to be observed.

⚠ The IO link device CPC10IO-S1 is supplied with voltage both via the supply terminals X!/X11 and via X81 COM.

5 Operating modes of the device CPC10IO-S1

5.1 Operating mode: SVS_SYSTEMINIT (system start)

The IO link device CPC10IO-S1 is initialised by applying the supply voltage. The device will carry out implemented programme memory tests and self test routines. During this time a communication via the interfaces is not possible.

5.2 Operating mode: SVS_ERROR_CRITICAL (critical failure)

If a failure is detected during the self test routines, the IO link controller will change into operating mode SVS_ERROR_CRITICAL. In the event of a critical failure, the device will also change into this operating mode. This operating mode can only be discontinued by way of re-starting the device and it prevents the data exchange via the interfaces. If the IO link device CPC10IO-S1 is in this operating mode, no communication is possible with the superordinate control unit. The electronic circuit protectors cannot be controlled by it and remain in the stand alone mode (overcurrent protection).

5.3 Operating mode: SVS_ERROR_UNCRITICAL (uncritical failure)

If there are invalid or no configuration data at all available in the IO link device CPC10IO-S1, it will change into the this operating mode. This operating mode only allows restricted non-cyclical data exchange. The electronic circuit protectors will receive the command “SetModeStandalone”. Cyclical data exchange is prevented. Leave this operating mode upon receipt of the correct module and slot parameters and configuration data.

5.4 Operating mode: SVS_PARAMETERIZATION (parameterisation of the SVS200-COM)

After applying the supply voltage and upon the availability of faultless module and slot data, the IO link device CPC10IO-S1 will change into the operating mode SVS_PARAMETERIZATION. The device data of the electronic circuit protectors will be imported. The defined slot type will be compared with the plugged-in type. If they both match, the parameter set is transmitted to this electronic circuit protector. The parameter sets will be transmitted to all configured and released slots. This operating mode will be left when the transmission of the parameter set to the last configured and released slot was confirmed.

5.5 Operating mode: SVS_STANDALONE (independent operation)

If no connection to the superordinate control unit is recognised after the supply voltage was applied, the module will also change into the operating mode SVS_STANDALONE. Thus the parameters stored in the IO link device CPC10IO-S1 will be transmitted to the electronic circuit protectors. If there is a connection between the IO link device CPC10IO-S1 and the superordinate IO link master and there is no critical failure, the operating mode SVS_STANDALONE will be quitted. If the connection between the IO link device CPC10IO-S1 to the superimposed control unit is interrupted during operation, the IO link device CPC10IO-S1 will automatically change into the operating mode SVS_STANDALONE.

Should the connection between the IO link device CPC10IO-S1 and the superordinate IO link master be interrupted and the non-cyclical parameter “UNFREEZE” be set, all circuit protectors will be switched off before changing into the operating mode “SVS_STANDALONE.”.

Should the connection between the IO link device CPC10IO-S1 and the superordinate IO link master be interrupted and the non-cyclical parameter “FREEZE” be set, the condition of the circuit protectors will remain unchanged before changing into the operating mode “SVS_STANDALONE”.

By means of the non-cyclical parameter, the behaviour of the IO link device CPC10IO-S1 can be defined in the event of an interruption of the communication to the superordinate IO link master. Either the condition of the circuit protector is frozen (FREEZE) or all circuit protectors are switched off (UNFREEZE).

Should the connection between the IO link device CPC10IO-S1 and the superordinate IO link master be restored after a previous interruption, the IO link device CPC10IO-S1 will automatically change into the operating mode “SVS_NORMAL_MODE”.

5.6 Operating mode: SVS_NORMAL_MODE (Faultless operation)

If there is no critical nor uncritical failure and the connection to the superordinate IO link master is in place, the IO link device CPC10IO-S1 will change into the operating mode SVS_NORMAL_MODE.

The parameters will transmitted from the superordinate IO link master to the IO link device CPC10IO-S1 and be saved there. Subsequently they will be forwarded to the electronic circuit protectors. The slot configuration data and the slot parameters will be exchanged as non-cyclical data between the IO link master (superordinate control) and the IO link device CPC10IO-S1.

5.7 Signalling of the various operating modes

The different operating modes of the IO link device CPC10IO-S1 are visually indicated as follows:

Operating mode	Indication of operating mode	
	LED CE/CM	**LED PWR**
SVS_SYSTEMINIT	yellow	green
SVS_ERROR_CRITICAL	red	green
SVS_ERROR_UNCRITICAL	[1] OFF/red	green
SVS_PARAMETERIZATION		green
SVS_STANDALONE	[1] OFF/green	green
SVS_NORMAL_MODE	green	green

[1] blank circles mean: blinking in the indicated colour.

fig. 8: List of the available operating modes

6 Basic functions of the entire system

6.1 Internal cycle time

The cycle time via the **ELBus®** is 530 ms. During the aforementioned period the status and the load current of each circuit protector is cyclically transmitted to the IO link device CPC10IO-S1.

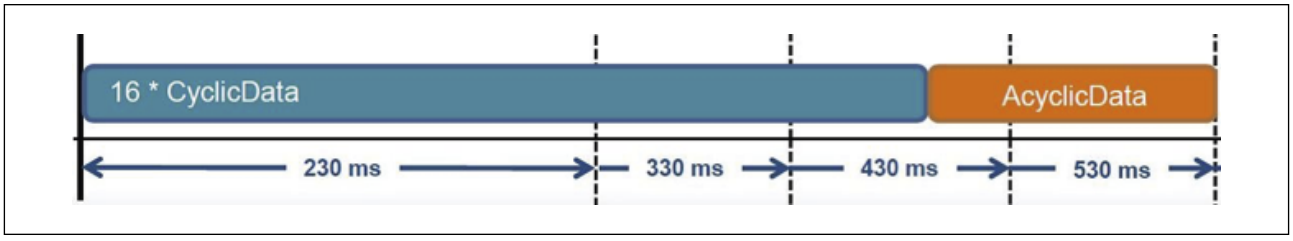

fig. 9: cycle times of the system

6.2 Hot swap of circuit protectors

The electronic circuit protectors ESX50D can be plugged into the power distribution board SVS201-PWR at any time. The ON/OFF button of the electronic circuit protector has to be in the OFF position.

For safety reasons the electronic circuit protectors ESX50D-S must only be plugged in in the OFF condition.

After plugging in a circuit protector, it will automatically be identified and parameterised if parameters are available for the slot in question. Transmission of the parameters will be without interruption of the cyclical data exchange between the IO link device CPC10IO-S1 and the electronic circuit protector ESX50D. Operational readiness, comprising the sending of parameter data after a hot swap, is established during the next free non-cyclical time slot according to the priorities of the parameters. Device information such as the serial number of the device have a minor priority compared to the parameter data and will be queried during the subsequent summation frame. After switching the device on with the ON/OFF button the electronic circuit protector is ready for use.

6.3 Communication via master-specific tools

Manufacturers of IO link master normally offer their own tools by means of which it is possible to directly communicate with the IO link device. They are partly integrated into the design surroundings or are entirely independent. Thus it is possible to parameterise the individual devices, indicate the status and receive diagnostic information.

7 Communication via IO link

7.1 ControlPlex® controller model

The IO link device CPC10IO-S1 has one ELBus COM terminal and is directly plugged onto an SVS201-PWR board. The SVS201-PWR boards are purely passive.

There are versions with 8 or 16 slots for the circuit protectors in connection with an IO link device CPC10IO-S1.

7.2 IODD file

The IODD file is in the download area of the E-T-A website and can be downloaded there. It is set up according to the regulations of the IO link user organisation (PROFIBUS User Organisation e.V.).

The following IODD file has to be used from firmware version 1.0.4: ETA-CPC10IO-20160702-IODD1.1 or a newer version of the IODD file.

8 Cyclical I/O data

The IODD file defines the data communication between the IO link master and the IO link device CPC10IO-S1. In detail these are the status and the load current of the electronic circuit protectors. In addition it is possible to switch the devices on or off or reset them in the event of a failure.

8.1 Data from IO link master to device

Each electronic circuit protector can be switched on or off or reset via the cyclical data.

Addressing is effected according to the following table:

byte[0]	bit 7	bit 6	bit 5	bit 4	bit 3	bit 2	bit 1	bit 0
Description	**128**	**64**	**32**	**16**	**8**	**4**	**2**	**1**
value	0/1	0/1	0/1	0/1	0/1	0/1	0/1	0/1
load output ON/OFF F1								0/1*
reset load output F1							0/1*	
load output ON/OFF F2						0/1*		
reset load output F2					0/1*			
load output ON/OFF F3				0/1*				
reset load output F3			0/1*					
load output ON/OFF F4		0/1*						
reset load output F4	0/1*							
byte[1]	**bit 15**	**bit 14**	**bit 13**	**bit 12**	**bit 11**	**bit 10**	**bit 9**	**bit 8**
Description	**128**	**64**	**32**	**16**	**8**	**4**	**2**	**1**
value	0/1	0/1	0/1	0/1	0/1	0/1	0/1	0/1
load output ON/OFF F5								0/1*
reset load output F5							0/1*	
load output ON/OFF F6						0/1*		
reset load output F6					0/1*			
load output ON/OFF F7				0/1*				
reset load output F7			0/1*					
load output ON/OFF F8		0/1*						
reset load output F8	0/1*							

byte[2]	bit 23	bit 22	bit 21	bit 20	bit 19	bit 18	bit 17	bit 16
Description	**128**	**64**	**32**	**16**	**8**	**4**	**2**	**1**
value	0/1	0/1	0/1	0/1	0/1	0/1	0/1	0/1
load output ON/OFF F9								0/1*
reset load output F9							0/1*	
load output ON/OFF F10						0/1*		
reset load output F10					0/1*			
load output ON/OFF F11				0/1*				
reset load output F11			0/1*					
load output ON/OFF F12		0/1*						
reset load output F12	0/1*							
byte[3]	**bit 31**	**bit 30**	**bit 29**	**bit 28**	**bit 27**	**bit 26**	**bit 25**	**bit 24**
Description	**128**	**64**	**32**	**16**	**8**	**4**	**2**	**1**
value	0/1	0/1	0/1	0/1	0/1	0/1	0/1	0/1
load output ON/OFF F13								0/1*
reset load output F13							0/1*	
load output ON/OFF F14						0/1*		
reset load output F14					0/1*			
load output ON/OFF F15				0/1*				
reset load output F15			0/1*					
load output ON/OFF F16		0/1*						
reset load output F16	0/1*							

fig. 10: data from IO link master to device

* status not set = 0 / status set = 1

For firmware version 1.1.0 and ETA-CPC10IO-20160702-IODD1.1 or newer IODD the following table applies:

byte[0]	bit 7	bit 6	bit 5	bit 4	bit 3	bit 2	bit 1	bit 0
Description	**128**	**64**	**32**	**16**	**8**	**4**	**2**	**1**
value	0/1	0/1	0/1	0/1	0/1	0/1	0/1	0/1
reset load output F1								0/1*
reset load output F2							0/1*	
reset load output F3						0/1*		
reset load output F4					0/1*			
reset load output F5				0/1*				
reset load output F6			0/1*					
reset load output F7		0/1*						
reset load output F8	0/1*							
byte[1]	**bit 15**	**bit 14**	**bit 13**	**bit 12**	**bit 11**	**bit 10**	**bit 9**	**bit 8**
Description	**32768**	**16384**	**8192**	**4096**	**2048**	**1024**	**512**	**256**
value	0/1	0/1	0/1	0/1	0/1	0/1	0/1	0/1
reset load output F9								0/1*
reset load output F10							0/1*	
reset load output F11						0/1*		
reset load output F2					0/1*			
reset load output F13				0/1*				
reset load output F14			0/1*					
reset load output 15		0/1*						
reset load output 16	0/1*							

byte[2]	bit 7	bit 6	bit 5	bit 4	bit 3	bit 2	bit 1	bit 0
Description	**128**	**64**	**32**	**16**	**8**	**4**	**2**	**1**
value	0/1	0/1	0/1	0/1	0/1	0/1	0/1	0/1
load output ON/OFF F1								0/1*
load output ON/OFF F2							0/1*	
load output ON/OFF F3						0/1*		
load output ON/OFF F4					0/1*			
load output ON/OFF F5				0/1*				
load output ON/OFF F6			0/1*					
load output ON/OFF F7		0/1*						
load output ON/OFF F8	0/1*							
byte[3]	**bit 15**	**bit 14**	**bit 13**	**bit 12**	**bit 11**	**bit 10**	**bit 9**	**bit 8**
Description	**32768**	**16384**	**8192**	**4096**	**2048**	**1024**	**512**	**256**
value	0/1	0/1	0/1	0/1	0/1	0/1	0/1	0/1
load output ON/OFF F9								0/1*
load output ON/OFF F10							0/1*	
load output ON/OFF F11						0/1*		
load output ON/OFF F12					0/1*			
load output ON/OFF F13				0/1*				
load output ON/OFF F14			0/1*					
load output ON/OFF F15		0/1*						
load output ON/OFF F16	0/1*							

fig. 11: data from IO link master to device from firmware 1.1.0

8.2 Data from IO link device CPC10IO-S1 to IO link master

The device status and the load current of each electronic circuit protector is fed back via the cyclical data. Addressing is effected according to the following table:

Description	byte[7]	byte[6]	byte[5]	byte[4]	byte[3]	byte[2]	byte[1]	byte[0]
value	0-255	0-255	0-255	0-255	0-255	0-255	0-255	0-255
status byte F1								0-255
load current F1							0-255	
status byte F2						0-255		
load current F2					0-255			
status byte F3				0-255				
load current F3			0-255					
status byte F4		0-255						
load current F4	0-255							
Description	**byte[15]**	**byte[14]**	**byte[13]**	**byte[12]**	**byte[11]**	**byte[10]**	**byte[9]**	**byte[8]**
value	0-255	0-255	0-255	0-255	0-255	0-255	0-255	0-255
status byte F5								0-255
load current F5							0-255	
status byte F6						0-255		
load current F6					0-255			
status byte F7				0-255				
load current F7			0-255					
status byte F7		0-255						
load current F8	0-255							
Description	**byte[23]**	**byte[22]**	**byte[21]**	**byte[20]**	**byte[19]**	**byte[18]**	**byte[17]**	**byte[16]**
value	0-255	0-255	0-255	0-255	0-255	0-255	0-255	0-255
status byte F9								0-255
load current F9							0-255	
status byte F10						0-255		
load current F10					0-255			
status byte F11				0-255				
load current F11			0-255					
status byte F12		0-255						
load current F12	0-255							
Description	**byte[31]**	**byte[30]**	**byte[29]**	**byte[28]**	**byte[27]**	**byte[26]**	**byte[25]**	**byte[24]**
value	0-255	0-255	0-255	0-255	0-255	0-255	0-255	0-255
status byte F13								0-255
load current F13							0-255	
status byte F14						0-255		
load current F14					0-255			
status byte F15				0-255				
load current F15			0-255					
status byte F16		0-255						
load current F16	0-255							

fig. 12: data from device to IO link master

8.2.1 Status circuit protector

Design of the input byte per circuit protector slot is as follows (status circuit protector):

Value range: 0 - 255

Data length: 1 byte (unsigned character)

byte[0]	bit 7	bit 6	bit 5	bit 4	bit 3	bit 2	bit 1	bit 0
Description	128	64	32	16	8	4	2	1
value	0/1	0/1	0/1	0/1	0/1	0/1	0/1	0/1
status load output								0/1*
status short circuit							0/1*	
status overload						0/1*		
status undervoltage					0/1*			
status overvoltage				0/1*				
status excess temperature			0/1*					
status limit value current		0/1*						
status result	0/1*							

fig. 13: status of circuit protector

* status not set = 0 / status set = 1

8.2.2 Load current circuit protector

Design of the input bytes per circuit protector slot is as follows (measuring value load current):

Value range: 0-255

Data length: 1 byte (unsigned character)

byte[0]	bit 7	bit 6	bit 5	bit 4	bit 3	bit 2	bit 1	bit 0
Description	**128**	**64**	**32**	**16**	**8**	**4**	**2**	**1**
value	0/1	0/1	0/1	0/1	0/1	0/1	0/1	0/1

fig. 14: load current of circuit protector

The load current is made available as a standardised 8-bit-value with a solution of 100 mA.
Example: measuring value load current = 092 → real measuring value = 9.2 Ampere.

9 Non-cyclical I/O data

The non-cyclical data communication allows to exchange more information between the control unit and the individual circuit protectors than via the limited cyclical range. Depending on the selected index, a varying number of data bytes are exchanged in the non-cyclical data traffic.

The table gives an overview over the parameter ranges, with which index they can be queried or changed.

parameter index [dec.]	parameter index [hex.]	slot no. to FW 1.1.0	slot no. from FW 1.1.0	no. of bytes	read (R) write (W)	description
2	2	CPC10IO	CPC10IO	1	R	system commands
19	13	CPC10IO	CPC10IO		R	product type
21	15	CPC10IO	CPC10IO		R	serial number
22	16	CPC10IO	CPC10IO		R	hardware version
23	17	CPC10IO	CPC10IO		R	software version
24	18		CPC10IO	32	R/W	Application Specific Tag
36	24		CPC10IO		R	Device Status
37	25		CPC10IO		R	Extended Device Status
40	28		CPC10IO		R	Process Data Input
41	29		CPC10IO		R	Process Data Output
200	0C8	CPC10IO	CPC10IO	1	R/W	configuration data CPC10IO
300	12C	CPC10IO	CPC10IO	2	R	diagnostic information CPC10IO
101-116	065-074	1-16	1-16	3	R/W	parameters of circuit protector
201-216	0C9-0D8	1-16	1-16	1	R/W	configuration data slot for circuit protector
301-316	12D-13C	1-16	1-16	1	R	internal communication messages
401-416	191-1A0	1-16	1-16	1	R	load voltage circuit protector
501-516	1F5-204	1-16	1-16	8	R	diagnostic messages circuit protector
601-616	259-268	1-16	1-16	1	W	action commands circuit protector
701-716	2BD-2CC	1-16	1-16	9	R	device information circuit protector

fig. 15: overview parameter index

9.1 System commands

This byte helps to non-cyclically carry out all system commands which the IO link device CPC10IO-S1 supports.

Value range: 0 - 255

Data length: 1 byte (unsigned integer)

byte[0]	bit 7	bit 6	bit 5	bit 4	bit 3	bit 2	bit 1	bit 0
Description	**128**	**64**	**32**	**16**	**8**	**4**	**2**	**1**
value	0/1	0/1	0/1	0/1	0/1	0/1	0/1	0/1
factory settings (re-store factory settings) (130)	1	0	0	0	0	0	1	0
store data to master (5)	0	0	0	0	0	1	0	1

fig. 16: system commands CPC10IO-S1

9.2 Device

9.2.1 Diagnosis information IO link device CPC10IO-S1

The 2 bytes input data contain the following global error and diagnostic messages. This module does not contain any output data.

Value range: 0 - 65535

Data length: 1 byte (unsigned integer)

byte[0] Low	bit 7	bit 6	bit 5	bit 4	bit 3	bit 2	bit 1	bit 0
Description	**128**	**64**	**32**	**16**	**8**	**4**	**2**	**1**
value	0/1	0/1	0/1	0/1	0/1	0/1	0/1	0/1
no configuration data available								0/1*
invalid configuration data							0/1*	
reserve								
reserve								
command buffer overflow				0/1*				
reserve								
reserve								
no communication with at least one PWR board	0/1*							
byte[1] high	**bit 15**	**bit 14**	**bit 13**	**bit 12**	**bit 11**	**bit 10**	**bit 9**	**bit 8**
Description	**128**	**64**	**32**	**16**	**8**	**4**	**2**	**1**
value	0/1	0/1	0/1	0/1	0/1	0/1	0/1	0/1
reserve								
CPC10IO temporary error							0/1*	
CPC10IO hardware error						0/1*		
reserve								
reserve								
reserve								
network error		0/1*						
writing via USB blocked	0/1*							

fig. 17: diagnosis data

* error/diagnosis not available = 0 / error/diagnosis available = 1

9.2.2 Configuration data IO link device CPC10IO-S1

These bytes hold the configuration data for the IO link device CPC10IO-S1.

1 byte is non-cyclically exchanged as configuration data for the IO link device CPC10IO-S1.

Value range: 0 - 255

Default value: 02

Data length: 1 byte (unsigned character)

byte[0]	bit 7	bit 6	bit 5	bit 4	bit 3	bit 2	bit 1	bit 0
Description	**128**	**64**	**32**	**16**	**8**	**4**	**2**	**1**
value	0/1	0/1	0/1	0/1	0/1	0/1	0/1	0/1
reserve								
offline behaviour (unfreeze/freeze)							0/1**	
power saving mode						0/1**		
reserve								
reserve								
reserve								
reserve								
reserve								

fig. 18: configuration data CPC10IO

** Unfreeze= 0 (all load outputs of the circuit protectors are switched off and the CPC10IO-S1 IO link device changes into the operating mode standalone).

** Freeze= 1 (all load outputs of the circuit protectors keep their current state and the CPC10IO-S1 IO link device changes into the operating mode standalone).

*** power saving mode deactivated = 0 / power saving mode activated = 1

9.2.2.1 Extended configuration data IO link device CPC10IO-S1

9.2.2.1.1 Application Specific Tag

The device supports the IO link property “Application Specific Tag (Index 24)”. The max. data length is at least 16 bytes and max. 32 bytes.

Please also see “IOL-Interface-Spec 10002 Version 1.1.2” of 13.07.2013.

9.2.2.1.2 Device Status

The device supports the IO link property “Device Status” (Index 36). The data length is 1 byte. The following values were defined:

value [dec.]	definition	explanation
0	DEVICE IS OPERATING PROPERLY	In all other events this value is transmitted
1	MAINTENANCE REQUIRED	This value is transmitted if one of the circuit protectors tripped due to short circuit or overload
2	OUT OF SPECIFICATION	This value is transmitted if one of the circuit protectors detected an undervoltage
3	FUNCTIONAL CHECK	Not supported
4	DEVICE FAILURE	This value is transmitted if one of the connected circuit protectors has set the error-bit in the **ELBus®** Device Status.

fig. 19: extended configuration data CPC10IO - device status

9.2.2.1.3 Extended Device Status

The device supports the IO link property “Extended Device Status” (Index 37).

Please also see “IOL-Interface-Spec 10002 Version 1.1.2” of 13.07.2013.

The data length is 64x3 byte.

Below please find the table B14 in detail - Detailed Device Status on page 227 of the spec.

sub-index [dec.]	object name	data type	explanation
1	Error_Warning_1	3 byte	All bytes with 0x00: No Error Warrning byte 1: Event Qualifier byte 2 and 3: Event Code
2	Error_Warning_2	3 byte	
3	Error_Warning_3	3 byte	
4	Error_Warning_4	3 byte	
...			
n	Error_Warning_n	3 byte	

fig. 20: extended configuration data CPC10IO - extended device status

9.2.2.1.4 Process Data Input

The device supports reader access to the IO link Process Data Input (Index 40).
The index holds the lastest valid process input data from the application.
The data type and the structure are identical with the process data in the corresponding process communication channel.
Please also see “IOL-Interface-Spec 10002 Version 1.1.2” of 13.07.2013.

9.2.2.1.5 Process Data Output

The device supports reader access to the IO link Process Data Output (Index 41).

The index holds the lastest valid process output data from the application.

The data type and the structure are identical with the process data in the corresponding process communication channel.

Please also see “IOL-Interface-Spec 10002 Version 1.1.2” of 13.07.2013.

9.2.3 Device information IO link CPC10IO-S1

9.2.3.1 Device type

The string holds information on the device type of the IO link device CPC10IO-S1.

9.2.3.2 Serial number

The string holds the serial number of the IO link device CPC10IO-S1.

9.2.3.3 Hardware version

The string holds the hardware version of the IO link device CPC10IO-S1.

9.2.3.4 Software version

The string holds the software version of the IO link device CPC10IO-S1.

9.3 Circuit protector

9.3.1 Device parameters of circuit protector

9.3.1.1 Current rating

The parameter in byte[0] determines the current rating of the ESX50D-S100.

Value range:	1A – 10A (whole numbers)
Default value:	1A (only with type ESX50D-S100)
Data length:	1 byte (unsigned character)

Regarding this parameter two types of device have to be distinguished. This parameter is only readable or writable with type ESX50D-S100. With type ESX50D-S110 this parameter is only readable.

byte[0]	bit 7	bit 6	bit 5	bit 4	bit 3	bit 2	bit 1	bit 0
Description	**128**	**64**	**32**	**16**	**8**	**4**	**2**	**1**
value	0/1	0/1	0/1	0/1	0/1	0/1	0/1	0/1
1 Ampere	0	0	0	0	0	0	0	1
2 Ampere	0	0	0	0	0	0	1	0
3 Ampere	0	0	0	0	0	0	1	1
4 Ampere	0	0	0	0	0	1	0	0
5 Ampere	0	0	0	0	0	1	0	1
6 Ampere	0	0	0	0	0	1	1	0
7 Ampere	0	0	0	0	0	1	1	1
8 Ampere	0	0	0	0	1	0	0	0
9 Ampere	0	0	0	0	1	0	0	1
10 Ampere	0	0	0	0	1	0	1	0

fig. 21: device parameters - current ratings of circuit protector

9.3.1.2 ON delay

The parameter in byte[1] determines the time delay between ON command the switch-on of the load output of ESX50D

Value range: 50ms – 2,500ms (whole numbers in 10ms steps)

Default value: 100ms

Data length: 1 byte (unsigned character)

byte[5]	bit 7	bit 6	bit 5	bit 4	bit 3	bit 2	bit 1	bit 0
Description	**128**	**64**	**32**	**16**	**8**	**4**	**2**	**1**
value	0/1	0/1	0/1	0/1	0/1	0/1	0/1	0/1
Example: 50ms 10ms * value (multiplier) = 10ms * 5 = 50ms	0	0	0	0	0	1	0	1

fig. 22: device parameter circuit protector - ON delay

9.3.1.3 Limit value load current

The parameter in byte[2] determines at how many percent of the rated current the ESX50D will signal "limit value exceeded".

Value range: 50% - 100% (whole numbers)

Default value: 80%

Data length: 1 byte (unsigned character)

byte[6]	bit 7	bit 6	bit 5	bit 4	bit 3	bit 2	bit 1	bit 0
Description	**128**	**64**	**32**	**16**	**8**	**4**	**2**	**1**
value	0/1	0/1	0/1	0/1	0/1	0/1	0/1	0/1
Example: 100%	0	1	1	0	0	1	0	0

fig. 23: device parameter circuit protector - limit value load current

9.3.2 Configuration data slot for circuit protector

1 byte is exchanged non-cyclically as configuration data for the slots. This byte holds the device type which shall be plugged into the corresponding slot.

Value range: 80-81

Default value: 80

Data length: 1 byte (unsigned character)

byte[0]	bit 7	bit 6	bit 5	bit 4	bit 3	bit 2	bit 1	bit 0
Description	**128**	**64**	**32**	**16**	**8**	**4**	**2**	**1**
value	0/1	0/1	0/1	0/1	0/1	0/1	0/1	0/1
ESX50D-S100 (80)	0	1	0	1	0	0	0	0
ESX50D-S110 (81)	0	1	0	1	0	0	0	1

fig. 24: configuration data device type

9.3.3 Internal communication messages

Internally the CPC10IO controller communicates with each circuit protector by means of a specifically defined protocol. Byte[0] contains the related latest feedback of the circuit protector to the CPC10IO controller.

Value range: 0 - 255

Data length: 1 byte (unsigned character) byte [8]

Error code [hex.]	Error code [dec.]	Meaning of the message up to firmware 1.1.0 and IODD 1.1.0 (20150305)	Meaning of the message from firmware 1.1.0 and IODD 1.1.0 (20160702) or later
0x00	0		no error
0x01	1	Wrong device connected - configuration does not match	wrong device connect (optional)
0x02	2		no protectors plugged in
0x20	32	No protectors identified	
0x90	144	Received wrong parameters - device parameters not plausible	received wrong parameters - device parameters not plausible
0x92	146	Switched off per hardware - slide switch is in OFF position	switched off per hardware - slide switch is in OFF position
0x93	147	Low voltage detected	Low voltage detected
0x94	148	Excess temperature detected	excess temperature detected (optional)
0x95	149	Device has to be reset	device has to be reset
0x96	150	No error - command processed correctly	
0x97	151	Device needs parameterising	device needs parameterising
0x98	152	Internal failure detected	Internal failure detected
0x99	153	Unknown command - wrong command	unknown command - wrong command
0x9A	154	Detected frame with wrong length	detected frame with wrong length
0x9B	155	Detected check sum error	detected check sum error
0x9C	156	* device changed its parameters - current rating selector switch was actuated	

fig. 25: diagnosis circuit protector - internal communication

* only with type ESX50D-S110

9.3.4 Action commands circuit protector

This output byte allows non-cyclical execution of all actions supported by the circuit protector.

Value range: 112–118, 126-127

Data length: 1 byte (unsigned character)

byte[0]	bit 7	bit 6	bit 5	bit 4	bit 3	bit 2	bit 1	bit 0
Description	**128**	**64**	**32**	**16**	**8**	**4**	**2**	**1**
value	0/1	0/1	0/1	0/1	0/1	0/1	0/1	0/1
reset error memory (115)	0	1	1	1	0	0	1	1
reset trip counter (116)	0	1	1	1	0	1	0	0

fig. 26: action commands circuit protector

9.3.5 Load voltage circuit protector

Byte[1] - byte[2] contain the load voltage of the circuit protector

Value range 0 - 65535

Data length: 2 byte (unsigned integer)

byte[1] (LOW)	bit 7	bit 6	bit 5	bit 4	bit 3	bit 2	bit 1	bit 0
Description	**128**	**64**	**32**	**16**	**8**	**4**	**2**	**1**
value	0/1	0/1	0/1	0/1	0/1	0/1	0/1	0/1
byte[2] (HIGH)	**bit 15**	**bit 14**	**bit 13**	**bit 12**	**bit 11**	**bit 10**	**bit 9**	**bit 8**
Description	32768	16384	8192	4096	2048	1024	512	256
value	0/1	0/1	0/1	0/1	0/1	0/1	0/1	0/1

fig. 27: load voltage circuit protector

The load voltage is made available as a standardised 16-bit-value with a solution of 10 mV.
Example: measuring value load voltage = 2512➔ real measuring value = 25.12 Volt.

9.3.6 Diagnostic messages circuit protector

9.3.6.1 Error memory

Byte[0] holds the internal error memory of the circuit protector.

Value range: 0 - 255

Data length: 1 byte (unsigned character)

byte[0]	bit 7	bit 6	bit 5	bit 4	bit 3	bit 2	bit 1	bit 0
Description	**128**	**64**	**32**	**16**	**8**	**4**	**2**	**1**
value	0/1	0/1	0/1	0/1	0/1	0/1	0/1	0/1
no parameters available								0/1*
error parameter memory							0/1*	
error programme memory						0/1*		
error data memory					0/1*			
error control unit				0/1*				
reset through watchdog			0/1*					
reserve								
reserve								

fig. 28: diagnosis circuit protector - error memory

* error not available = 0 / error available = 1

9.3.6.2 Trip counter

Byte[1] - byte[2] contain the trip counter of the circuit protector

Value range: 0…65535

Data length: 2 byte (unsigned integer)

byte[1] (LOW)	bit 7	bit 6	bit 5	bit 4	bit 3	bit 2	bit 1	bit 0
Description	**128**	**64**	**32**	**16**	**8**	**4**	**2**	**1**
value	0/1	0/1	0/1	0/1	0/1	0/1	0/1	0/1
byte[2] (HIGH)	**bit 15**	**bit 14**	**bit 13**	**bit 12**	**bit 11**	**bit 10**	**bit 9**	**bit 8**
Description	**32768**	**16384**	**8192**	**4096**	**2048**	**1024**	**512**	**256**
value	0/1	0/1	0/1	0/1	0/1	0/1	0/1	0/1

fig. 29: diagnosis circuit protector - trip counter

9.3.6.3 Trip reason

Byte[3] holds the latest reason for trip of the circuit protector.

Value range: 0 - 4

Data length: 1 byte (unsigned character)

byte[3]	bit 7	bit 6	bit 5	bit 4	bit 3	bit 2	bit 1	bit 0
Description	**128**	**64**	**32**	**16**	**8**	**4**	**2**	**1**
value	0/1	0/1	0/1	0/1	0/1	0/1	0/1	0/1
no reason for trip available (0)	0	0	0	0	0	0	0	0
trip reason short circuit (1)	0	0	0	0	0	0	0	1
trip reason overload (2)	0	0	0	0	0	0	1	0
trip reason device temperature (3)	0	0	0	0	0	0	1	1
Trip reason internal failure (4)	0	0	0	0	0	1	0	0

fig. 30: diagnosis circuit protector - trip reason

9.3.6.4 Operating voltage

Byte[4] - byte[5] contain the operating voltage of the circuit protector

Value range: 0 - 65535

Data length: 2 byte (unsigned integer)

byte[4] (LOW)	bit 7	bit 6	bit 5	bit 4	bit 3	bit 2	bit 1	bit 0
Description	**128**	**64**	**32**	**16**	**8**	**4**	**2**	**1**
value	0/1	0/1	0/1	0/1	0/1	0/1	0/1	0/1
byte[5] (HIGH)	**bit 15**	**bit 14**	**bit 13**	**bit 12**	**bit 11**	**bit 10**	**bit 9**	**bit 8**
Description	**32768**	**16384**	**8192**	**4096**	**2048**	**1024**	**512**	**256**
value	0/1	0/1	0/1	0/1	0/1	0/1	0/1	0/1

fig. 31: diagnosis circuit protector - operating voltage

The operating voltage is made available as a standardised 16-bit-value with a solution of 10 mV.
Example: measuring value load voltage = 2512➔ real measuring value = 25.12 Volt.

9.3.6.5 Device temperature

Byte[6] - byte[7] contain the internal device temperature of the circuit protector.

Value range: 0 - 65535

Data length: 2 bytes (integer)

byte[6] (LOW)	bit 7	bit 6	bit 5	bit 4	bit 3	bit 2	bit 1	bit 0
Description	**128**	**64**	**32**	**16**	**8**	**4**	**2**	**1**
value	0/1	0/1	0/1	0/1	0/1	0/1	0/1	0/1
byte[7] (HIGH)	**bit 15**	**bit 14**	**bit 13**	**bit 12**	**bit 11**	**bit 10**	**bit 9**	**bit 8**
Description	**32768**	**16384**	**8192**	**4096**	**2048**	**1024**	**512**	**256**
value	0/1	0/1	0/1	0/1	0/1	0/1	0/1	0/1

fig. 32: diagnosis circuit protector - device temperature

The internal device temperature is made available as a standardised 16-bit-value (integer) with a whole-number solution in degree centigrade.
Examples: Measuring value device temperature = 45, real measuring value = 45°C.

9.4 Device information circuit protector

9.4.1 Device type

Byte[0] holds information on the device type of the circuit protector.

Value range: 80-81

Error: Device type not available (255)

Data length: 1 byte (unsigned character)

byte[6] (LOW)	bit 7	bit 6	bit 5	bit 4	bit 3	bit 2	bit 1	bit 0
byte[0]	**bit 7**	**bit 6**	**bit 5**	**bit 4**	**bit 3**	**bit 2**	**bit 1**	**bit 0**
Description	128	64	32	16	8	4	2	1
value	0/1	0/1	0/1	0/1	0/1	0/1	0/1	0/1
ESX50D-S100 (80)	0	1	0	1	0	0	0	0
ESX50D-S110 (81)	0	1	0	1	0	0	0	1

fig. 33: Device information circuit protector - device type

9.4.2 Hardware version

Byte[5] - Byte[6] contain the hardware version of the circuit protector

The hardware version is made available in whole numbers.

Value range: 0…65535

Error: Hardware version not available (65535)

Data length: 2 byte (unsigned integer)

byte[5] (LOW)	bit 7	bit 6	bit 5	bit 4	bit 3	bit 2	bit 1	bit 0
Description	**128**	**64**	**32**	**16**	**8**	**4**	**2**	**1**
value	0/1	0/1	0/1	0/1	0/1	0/1	0/1	0/1
byte[6] (HIGH)	**bit 15**	**bit 14**	**bit 13**	**bit 12**	**bit 11**	**bit 10**	**bit 9**	**bit 8**
Description	**32768**	**16384**	**8192**	**4096**	**2048**	**1024**	**512**	**256**
value	0/1	0/1	0/1	0/1	0/1	0/1	0/1	0/1

fig. 34: Device information circuit protector - hardware version

9.4.3 Software version

Byte[7] - Byte[8] contain the software version of the circuit protector

The software version is made available BCD coded.

It is coded as follows:

software version = X.Y.Z

High Byte (bit 12 – bit 15) = reserve

High Byte (Bit 8 – Bit 11) = X

Low Byte (Bit 4 – Bit 7) = Y

Low Byte (Bit 0 – Bit 3) = Z

Value range: 0…65535

Error: Software version not available (65535)

Data length: 2 byte (unsigned integer)

byte[7] (LOW)	bit 7	bit 6	bit 5	bit 4	bit 3	bit 2	bit 1	bit 0
Description	**128**	**64**	**32**	**16**	**8**	**4**	**2**	**1**
value	0/1	0/1	0/1	0/1	0/1	0/1	0/1	0/1
byte[8] (HIGH)	**bit 15**	**bit 14**	**bit 13**	**bit 12**	**bit 11**	**bit 10**	**bit 9**	**bit 8**
Description	**32768**	**16384**	**8192**	**4096**	**2048**	**1024**	**512**	**256**
value	0/1	0	0	0	0/1	0/1	0/1	0/1

fig. 35: Device information circuit protector - software version

9.4.4 Serial number

Byte[1] - Byte[4] contain the serial number of the circuit protector

Value range: 0…4294967295

Error: Serial number not available (4294967295)

Data length: 4 byte (unsigned long)

byte[1] (LOW)	bit 7	bit 6	bit 5	bit 4
Description	**128**	**64**	**32**	**16**
value	0/1	0/1	0/1	0/1
byte[1] (LOW)	**bit 3**	**bit 2**	**bit 1**	**bit 0**
Description	**8**	**4**	**2**	**1**
value	0/1	0/1	0/1	0/1

byte[2]	bit 15	bit 14	bit 13	bit 12
Description	**32768**	**16384**	**8192**	**4096**
value	0/1	0/1	0/1	0/1
byte[2]	**bit 11**	**bit 10**	**bit 9**	**bit 8**
Description	**2048**	**1024**	**512**	**256**
value	0/1	0/1	0/1	0/1

byte[3]	bit 23	bit 22	bit 21	bit 20
Description	**8388608**	**4194304**	**2097152**	**1048576**
value	0/1	0/1	0/1	0/1
byte[3]	**bit 19**	**bit 18**	**bit 17**	**bit 16**
Description	**524288**	**262144**	**131072**	**65536**
value	0/1	0/1	0/1	0/1

byte[4] (HIGH)	bit 31	bit 30	bit 29	bit 28
Description	**2147483648**	**1073741824**	**536870912**	**268435456**
value	0/1	0/1	0/1	0/1
byte[4] (HIGH)	**bit 27**	**bit 26**	**bit 25**	**bit 24**
Description	**134217728**	**67108864**	**33554432**	**16777216**
value	0/1	0/1	0/1	0/1

fig. 36: Device information circuit protector - serial number

10 Appendix

10.1 List of pictures

fig. 1: system overview 6
fig. 2: CPC10IO-S1 7
fig. 3: display elements and terminals CPC10IO-S1 7
fig. 4: IO link connection 8
fig. 5: mounting attitude 9
fig. 6: terminals CPC10IO-S1-xxx 9
fig. 7: connection of IO link connector 10
fig. 8: list of the available operating modes 12
fig. 9: cycle times of the system 12
fig. 10: data from IO link master to device 15
fig. 11: data from IO link master to device from firmware 1.1.0 17
fig.12: data from device to IO link master 18
fig. 13: status of circuit protector 19
fig. 14: load current of circuit protector 19
fig. 15: overview parameter index 20
fig. 16: system commands CPC10IO-S1 21
fig. 17: diagnostic data 22
fig. 18: configuration data CPC10IO 23
fig. 19: extended configuration data CPC10IO - device status 24
fig. 20: extended configuration data CPC10IO - extended device status 24
fig. 21: parameters of circuit protector – current rating 26
fig. 22: device parameters circuit protector – ON delay 26
fig. 23: device parameters circuit protector – limit value load current 26
fig. 24: configuration data device type 27
fig. 25: diagnosis circuit protector - internal communication 27
fig. 26: action commands circuit protector 28
fig. 27: load voltage circuit protector 28
fig. 28: diagnosis circuit protector - error memory 29
fig. 29: diagnosis circuit protector - trip counter 29
fig. 30: diagnosis circuit protector - trip reason 30
fig. 31: diagnosis circuit protector - operating voltage 30
fig. 32: diagnosis circuit protector - device temperature 31
fig. 33: device information circuit protector - device type 31
fig. 34: device information circuit protector - hardware version 32
fig. 35: device information circuit protector - software version 32
fig. 36: device information circuit protector - serial number 33

10.2 Technical data

For the technical data of CPC10IO please see relevant data sheet.

Notes

http://www.e-t-a.de/ QR1016

Bedienungsanleitung/Instruction manual CPC10IO_d_080916
Bestell-Nr./Ref. number Y31199401 - Index: -
Issue 09/2016
Alle Rechte vorbehalten / All rights reserved

ENGINEERING TECHNOLOGY

E-T-A Elektrotechnische Apparate GmbH
Industriestraße 2-8 · 90518 ALTDORF
GERMANY
Tel. 09187 10-0 · Fax 09187 10-397
E-Mail: info@e-t-a.de · www.e-t-a.de